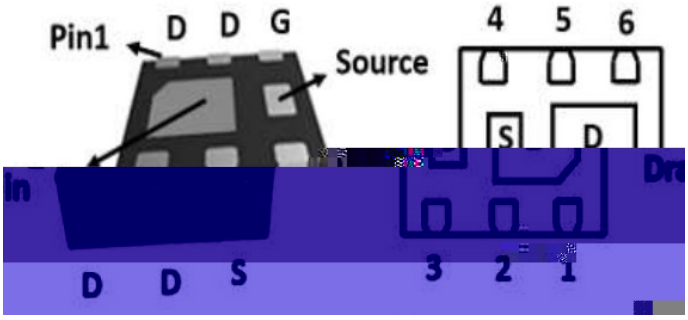
Pin1
D D G
Source
4 5 6
S D
D D S
3 2 1

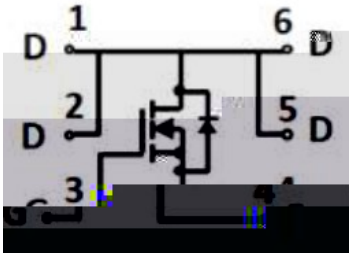
1
6
D
D
2
5
D
D
3
4

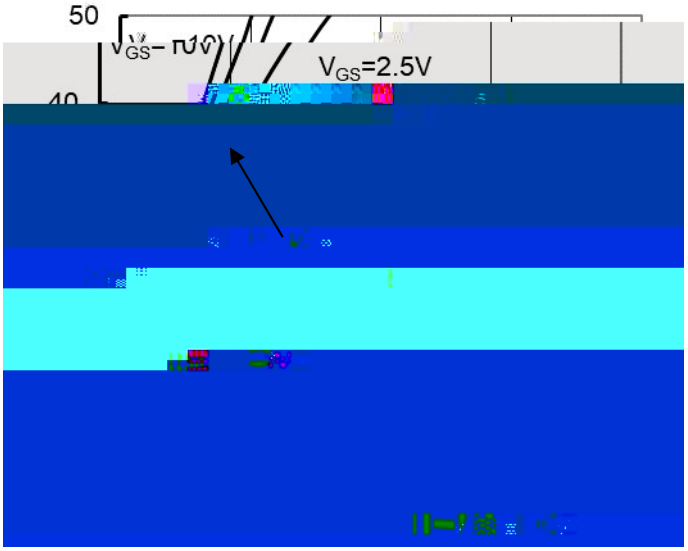
50
40
V_{GS}=2.5V

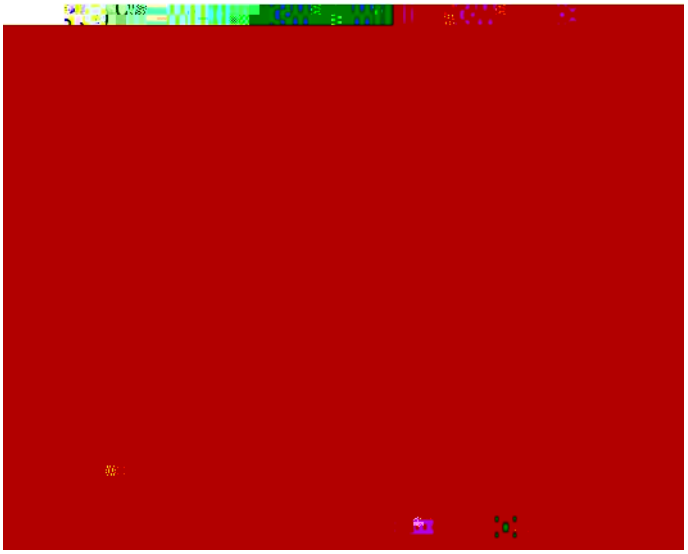

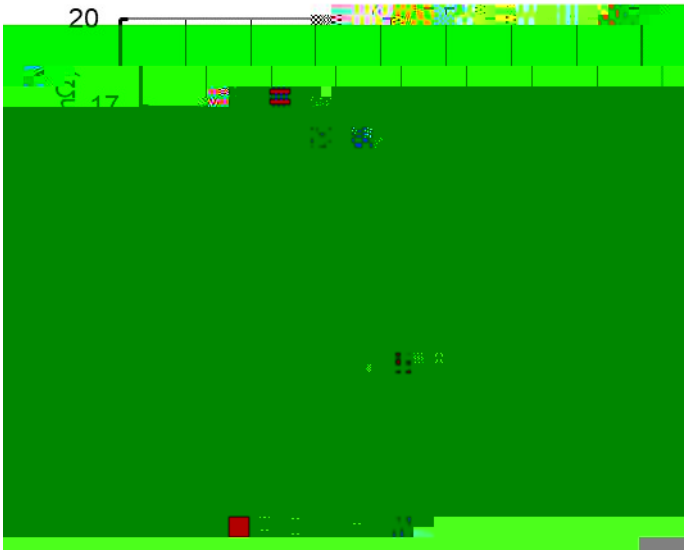
20
17

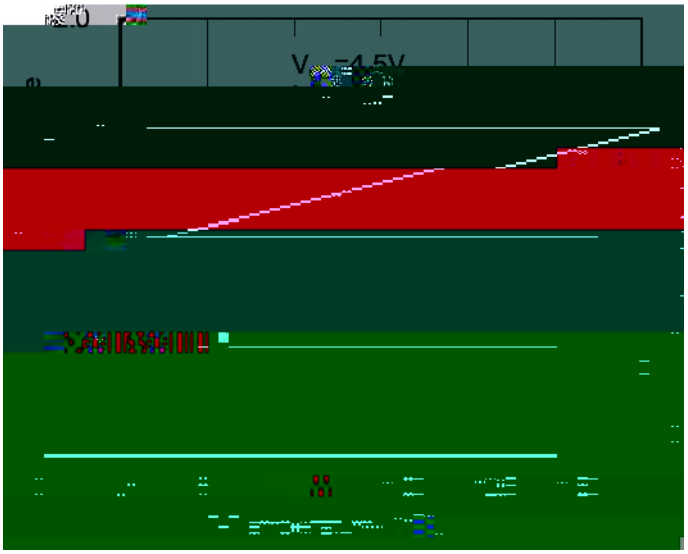

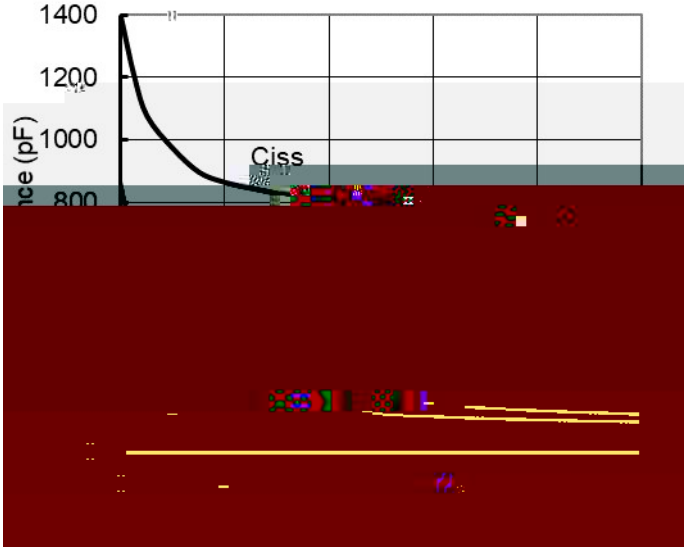
1400
1200
1000
800
Ciss

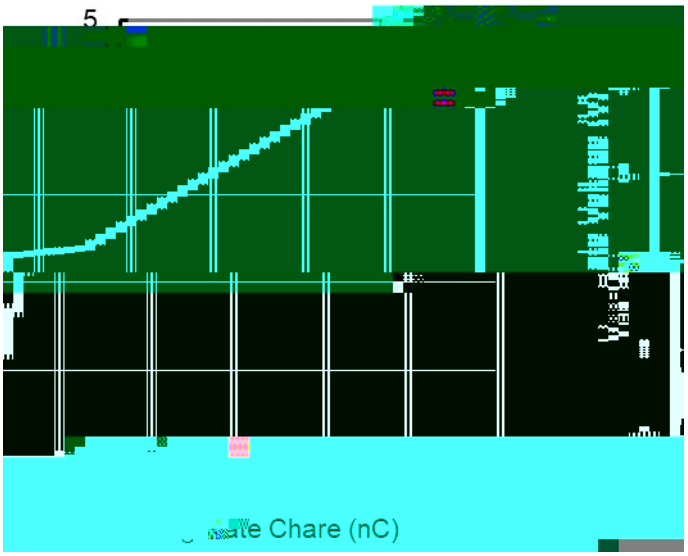
5
Chare (nC)

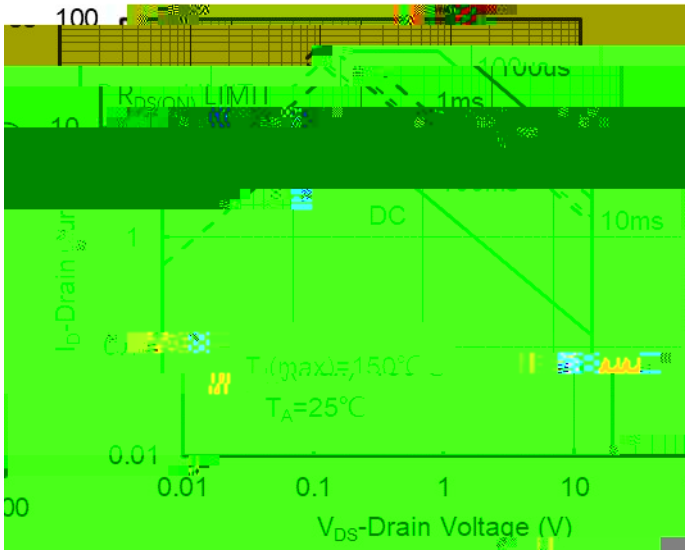
100
10
1
0.01
0.01
0.1
1
10
100
$R_{DS(ON)}$ LIMIT
100us
1ms
10ms
DC
T_A=25°C
V_{DS}-Drain Voltage (V)

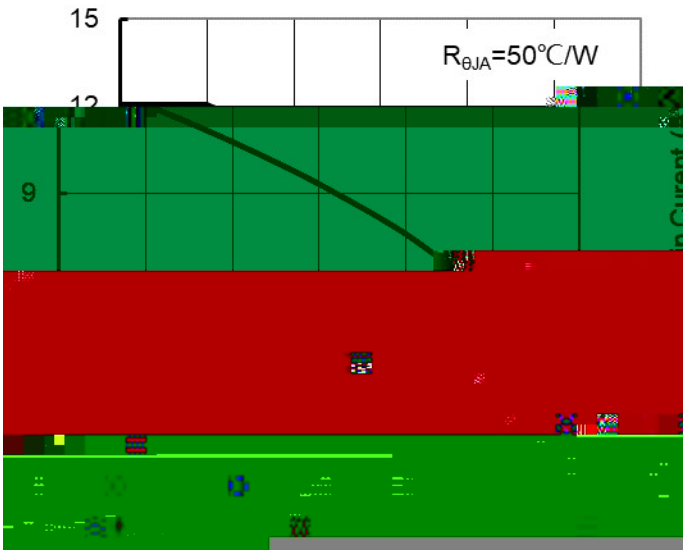
15
12
9
$R_{\theta JA}$=50°C/W

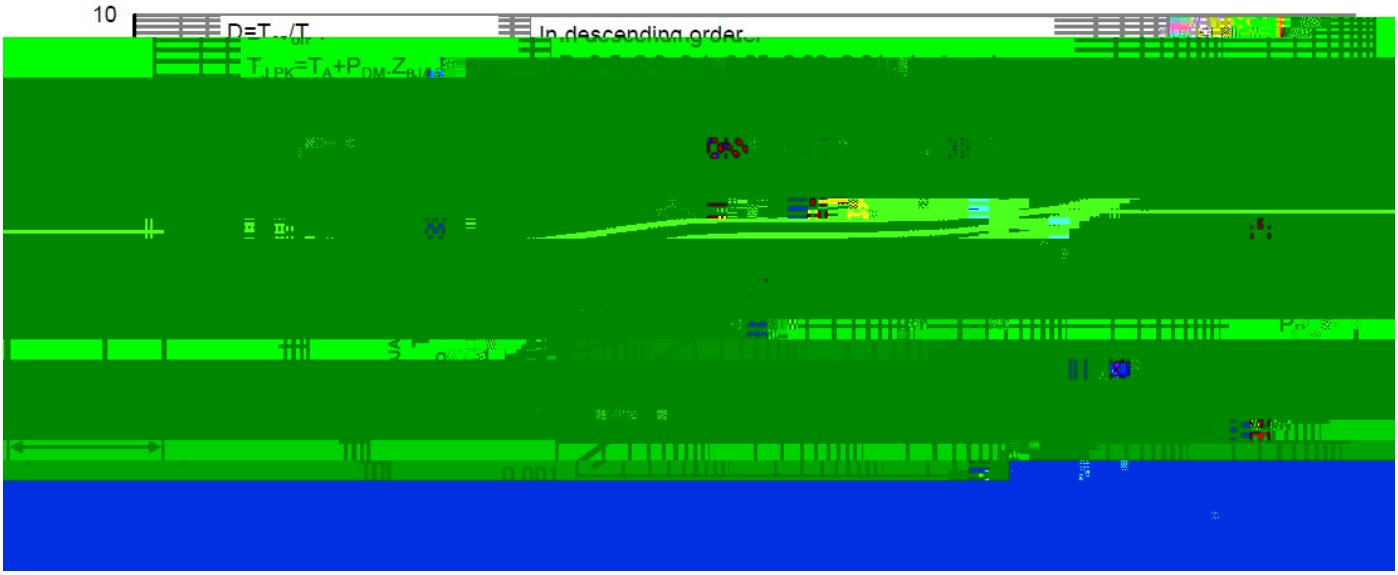
10
In descending order

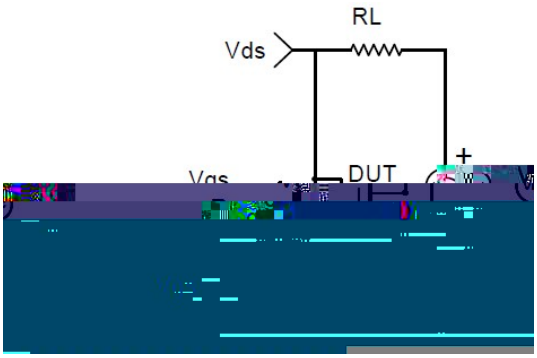
RL
Vds
DUT
+

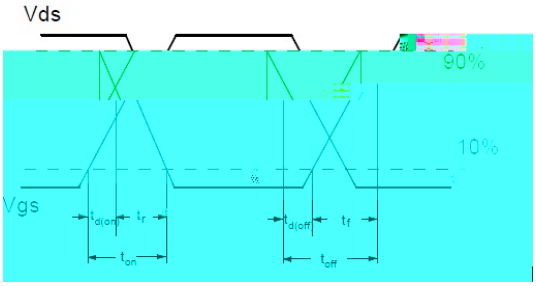
Vds
90%
10%
Vgs

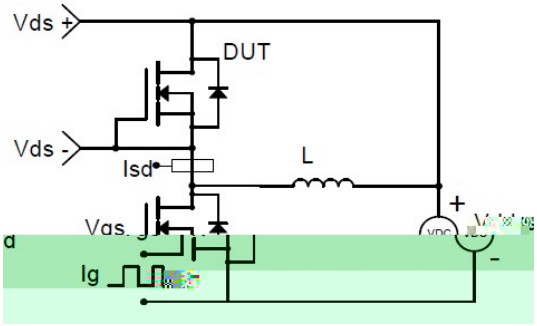
Vds +
DUT
Vds -
Isd
L
Vgs
Ig
+
-

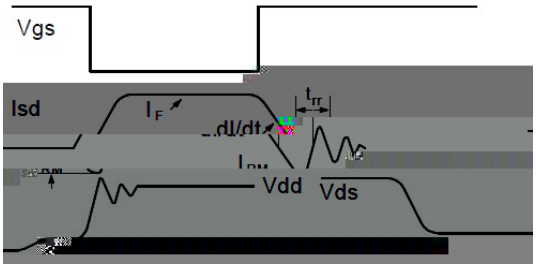
Vgs
Isd
Vdd
Vds

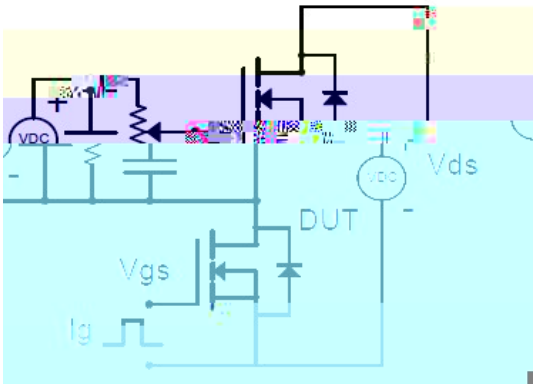
VDC
Vds
DUT
Vgs
Ig

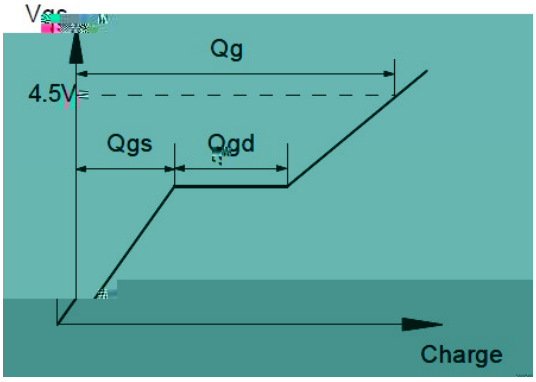
Qg
4.5V
Qgs
Qgd
Charge

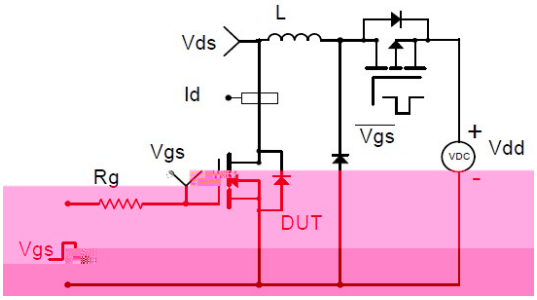
L
Vds
Id
Vgs
Rg
DUT
Vgs
+
Vdd
-

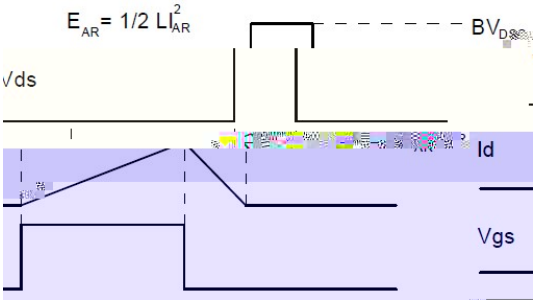
E_AR = 1/2 LI²_AR
BV_DS
Vds
Id
Vgs

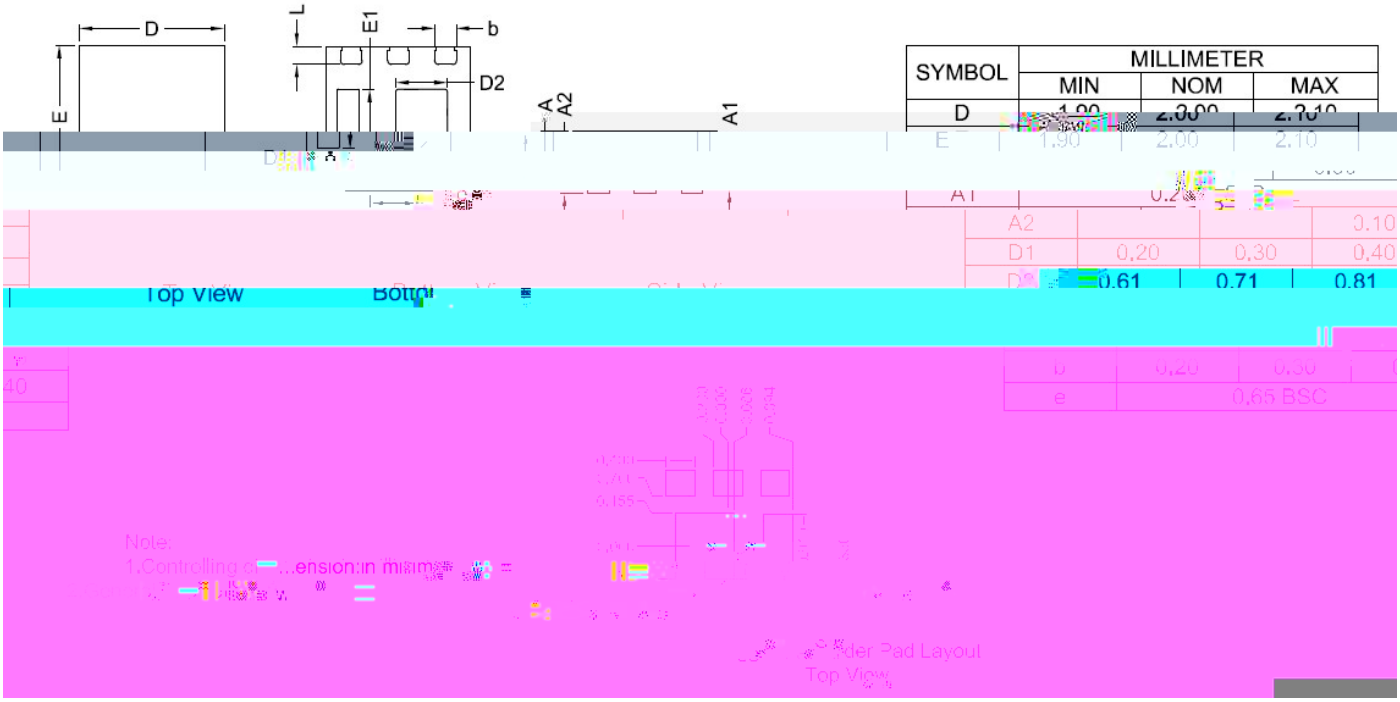

SYMBOL	MILLIMETER		
	MIN	NOM	MAX
D	1.90	2.00	2.10
E	1.90	2.00	2.10
A			0.90
A1		0.2 REF	
A2			0.10
D1	0.20	0.30	0.40
D2	0.61	0.71	0.81
b	0.20	0.30	0.40
e	0.65 BSC		